emuca
where creation begins

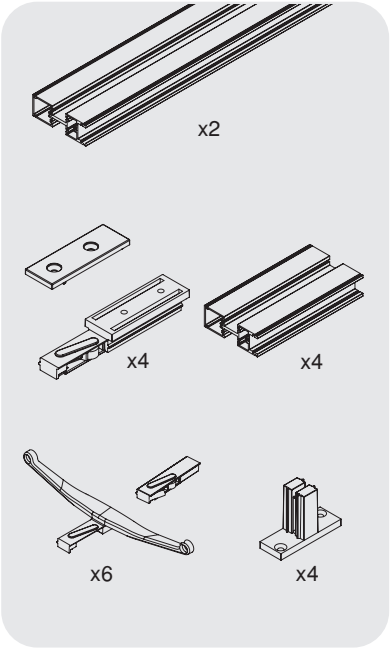

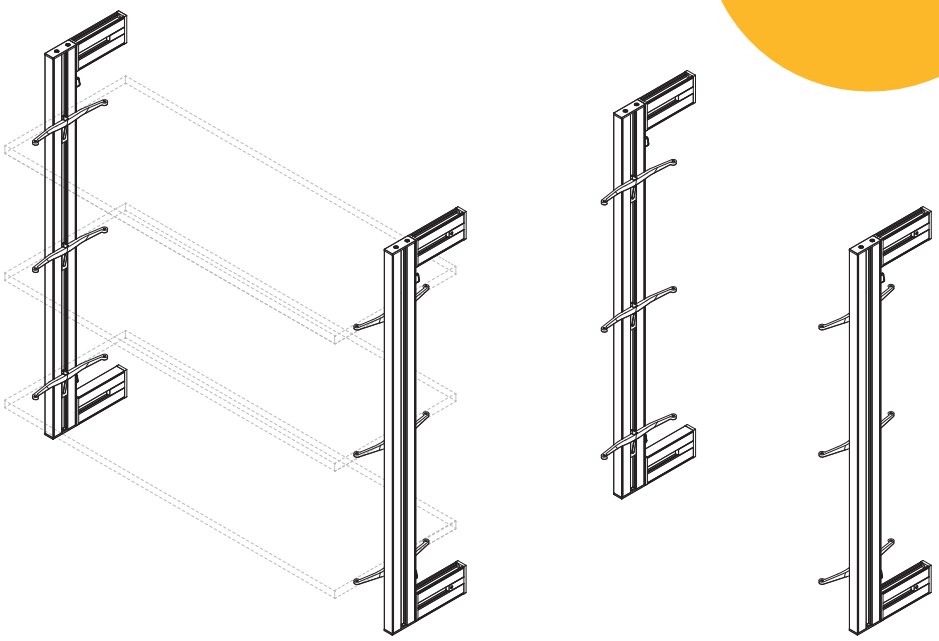

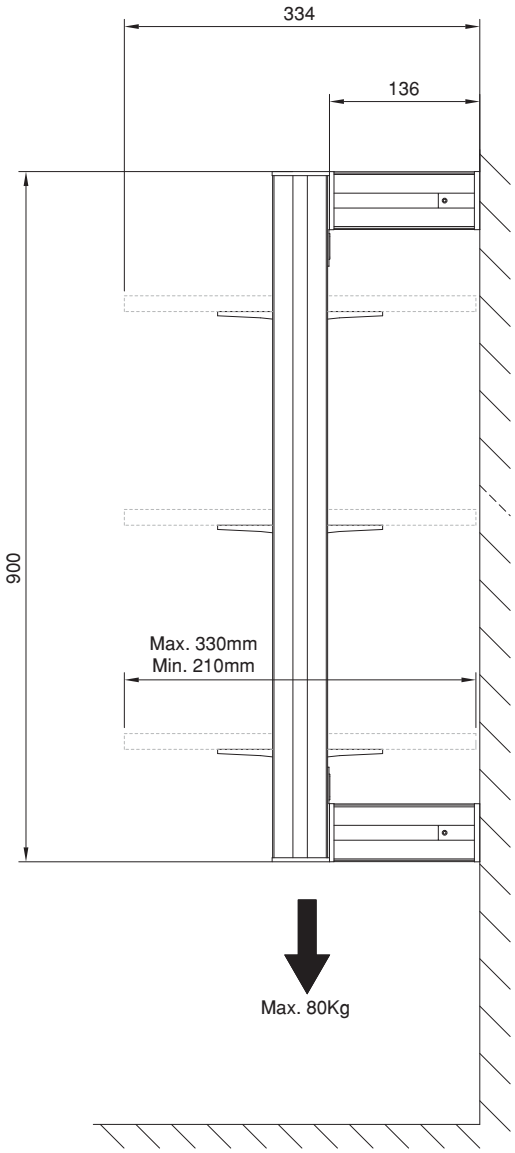

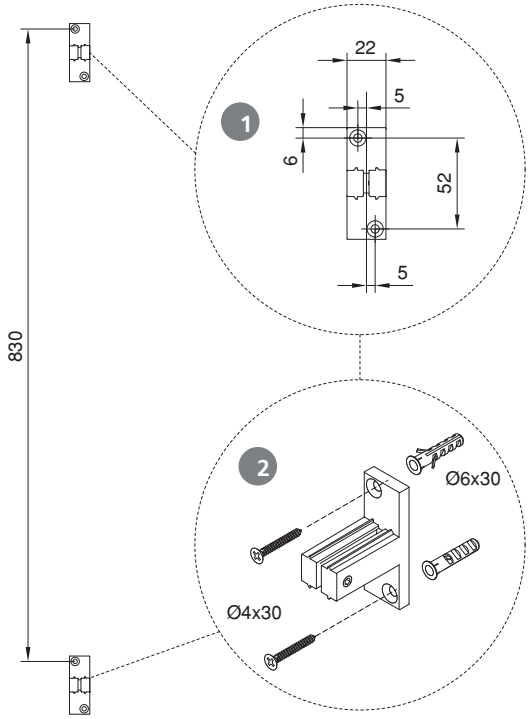

emuca
where creation begins

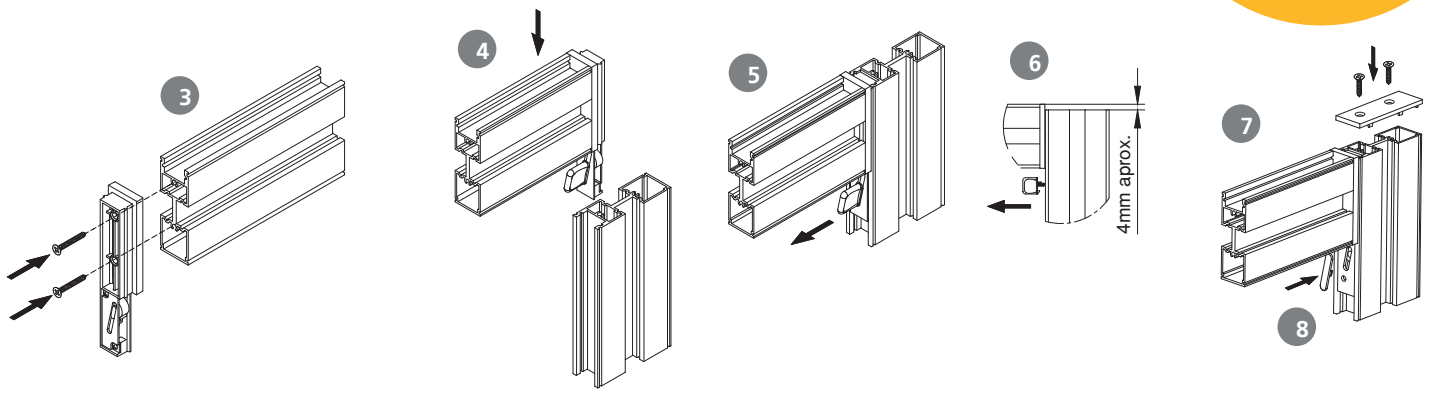

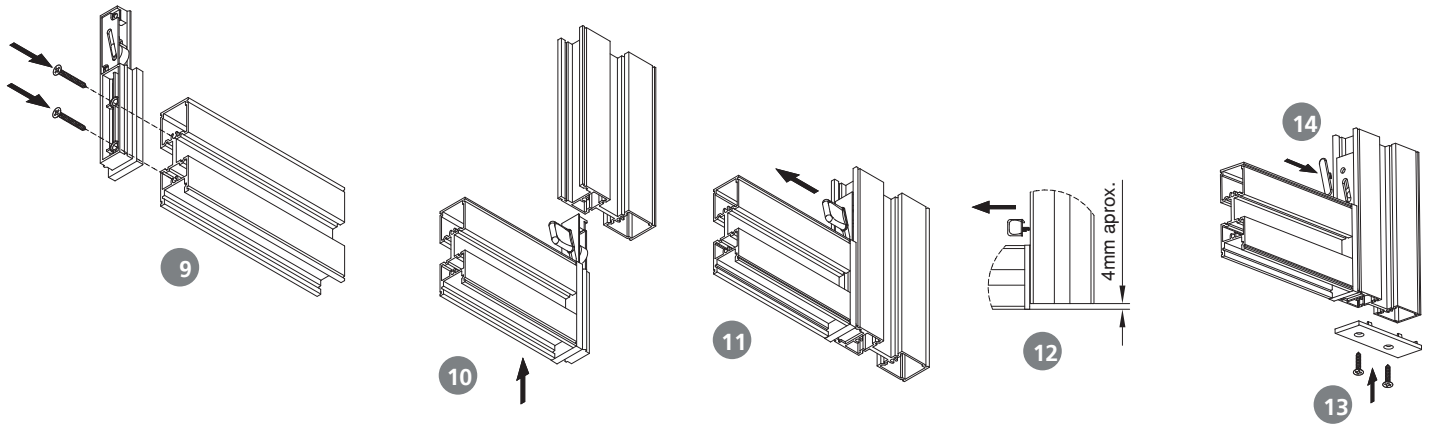

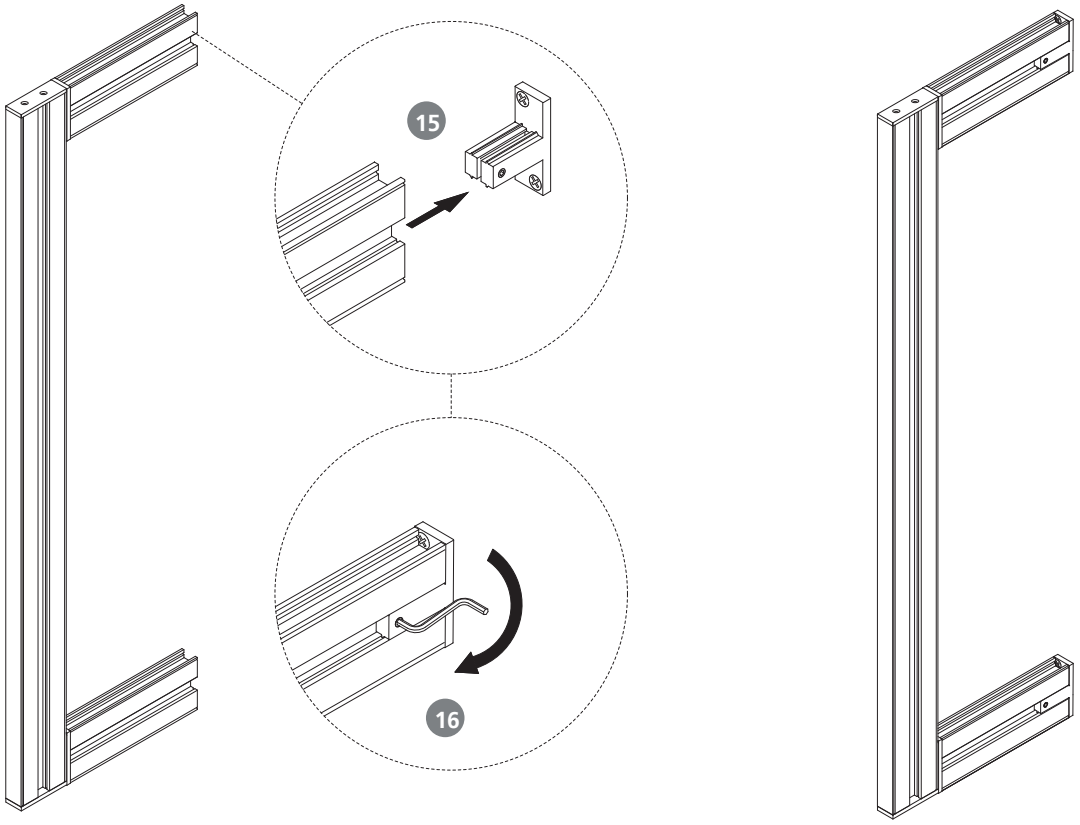

emuca
where creation begins

17

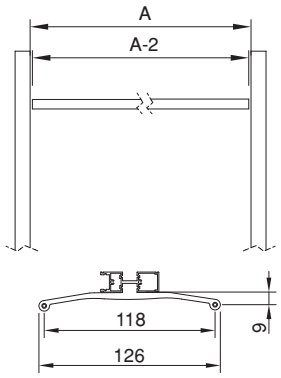

18

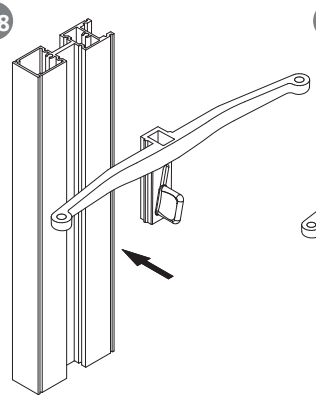

19

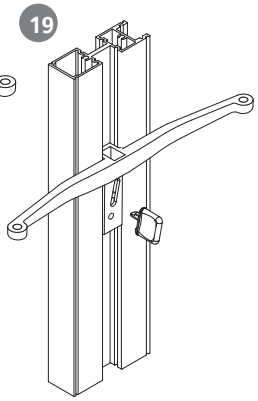

20

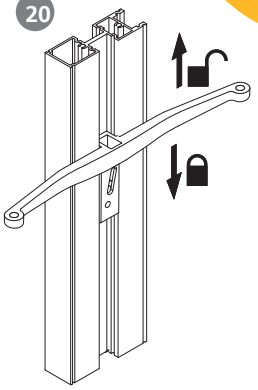

21

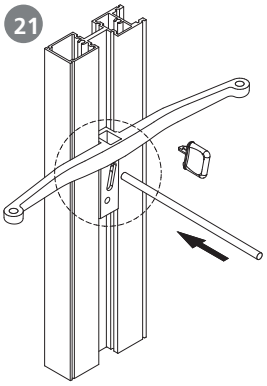

22

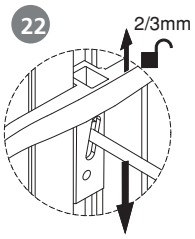

23

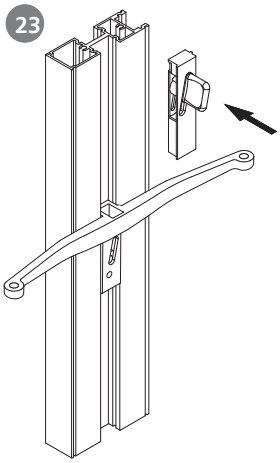

24

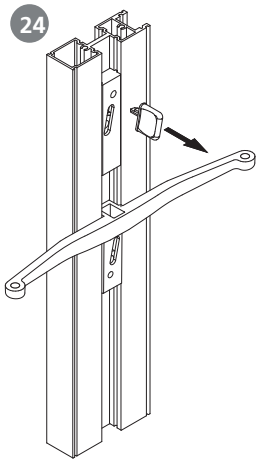

25

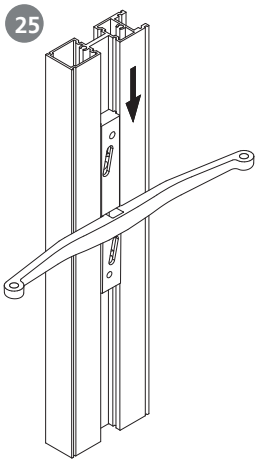

26

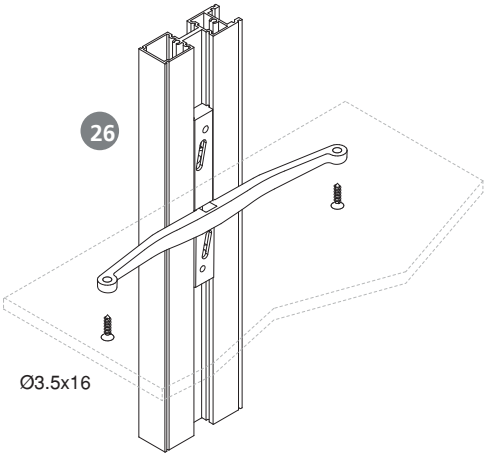
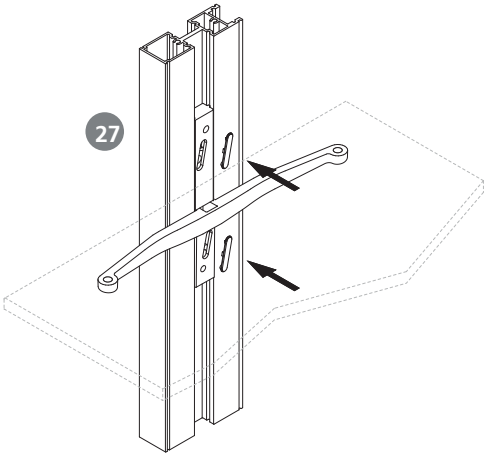
27